MDT 500-68 (MILL DUTY THRUSTER BRAKES)

INTRODUCTION

Thruster Brake is a device to retard the speed of moving machinery and to stop it accurately to the desired position. The breaking force is applied to the brake shoes by a pre-stressed compression spring. The shoes press on the rotating brake drum retarding its speed, and finally stopping it.

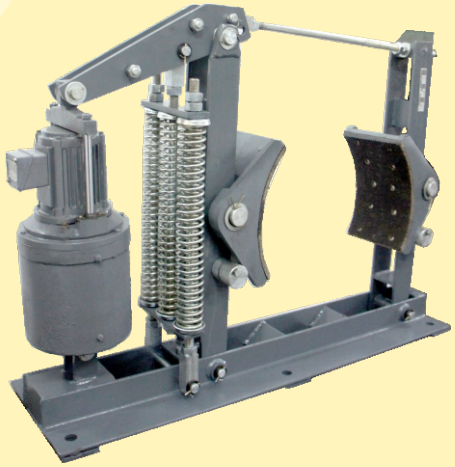

TECHNICAL DATA

ITEM	BRAKE	THRUSTER
MODEL	MDT - 500-68	ST- 870
DRUM DIA	500 mm	.....
BRAKE SHOE	Asbestos free/BA	.....
BRAKING TORQUE	290 Kg-m	.....
THRUST	.....	68 Kg
STROKE	.....	76 mm
OIL + CAPACITY	.....	Transformer Oil 5 Litrs
RATED VOLTAGE	.....	415V±10%,3PhAC,50Hz
CURRENT AT 415 V AC	.....	0.7 Amps
POWER	.....	200 Watt
INSULATION	.....	F Class
INGRESS PROTECTION	.....	IP-55 IS/IEC 60529(2001)
SURFACE TEMPERATURE	.....	+50°C
WEIGHT	111 kg	34 kg
POWDER COATING	Colour RAL 7021	
OPTION		
LAF	Asbestos Free Liner	
LWI	Lining Wear Indicator	
OL	Open Brake Limit Switch	
MS	Manual Opening & Locking System	

SELECTION OF BRAKE SIZE

Electo-hydraulic thruster is a device which develops linear thrust (or force) required to operate the required mechanism. The input to the device is three phase supply.

The brake torque must be = > than motor full load as referred with drum. Formula as below:

T = Torque in Kgm = $\frac{716 \times Hp}{rpm}$

T = Torque in Nm = $\frac{9552 \times Kw}{rpm}$

Where Hp/Kw = motor output & rpm = Rev/minute

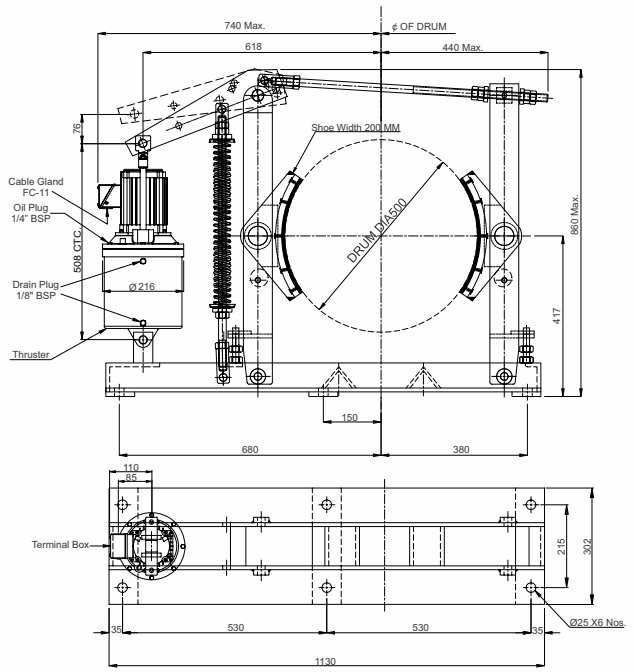

MDT-500-68

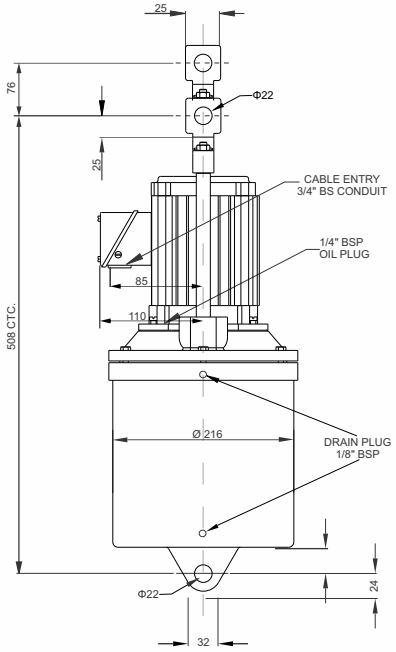

ST-870

H. O. Unit -I : C-15/16, Nand Jyot Industrial Estate, Andheri-Kurla Road, Mumbai - 400072 ,
Tel : (022) 42469700/730
E-mail : sales@socgroup.in

Unit - II: Plot No. 4912, G. I. D. C., Phase IV, Vatva, Ahmedabad - 382445
Tel.: (079) 68169700/702/712
E-mail : enquiry2@socgroup.in

Visit us at :
www.speedocontrols.com
www.socremote.com

SPEED-O-CONTROLS PVT. LTD.
CRANE CONTROL GEAR

V2